TAPEPRO
DRYWALL TOOLS

Automatic Taper SuperLite
(Sheet 1 of 3)

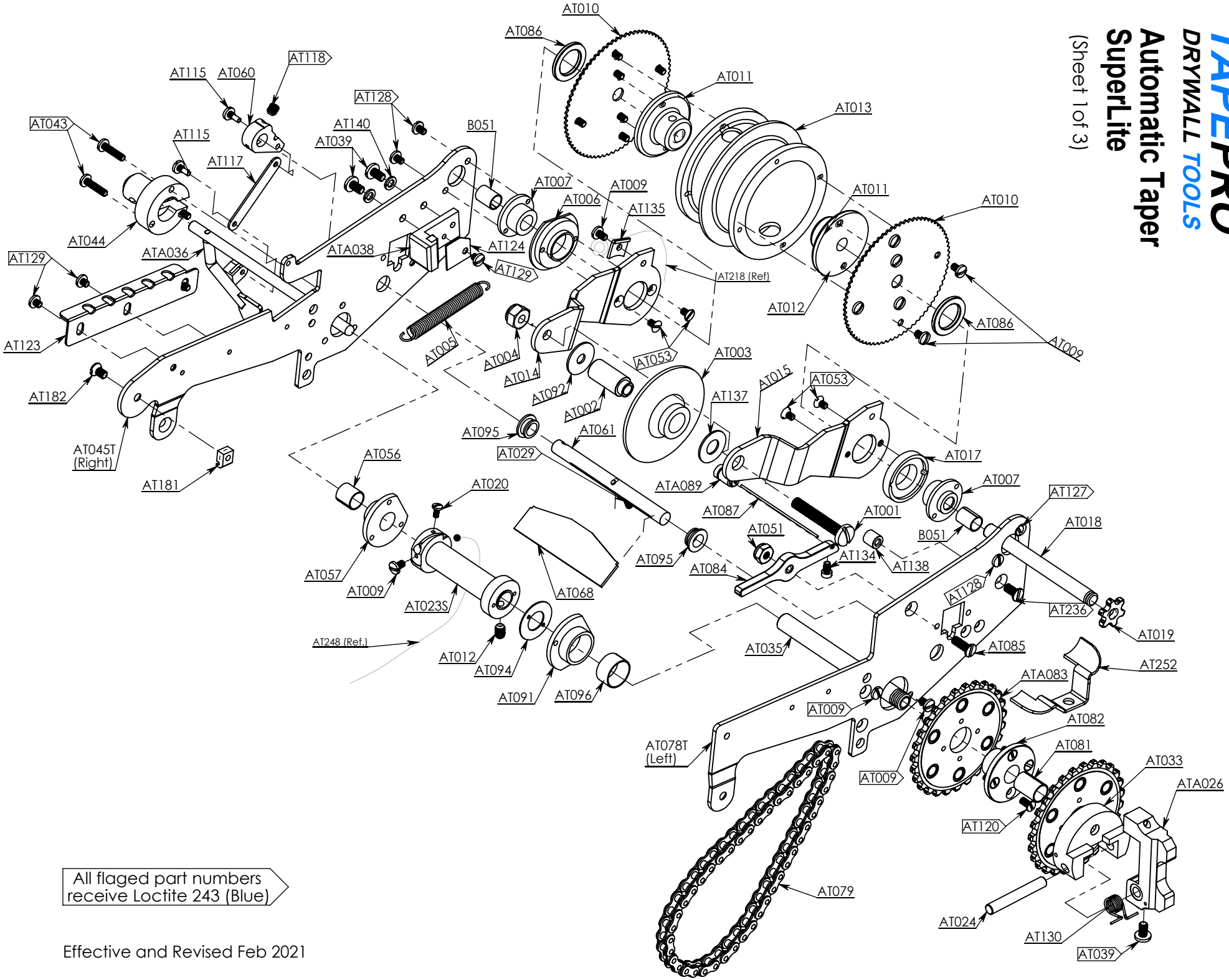

All flaged part numbers receive Loctite 243 (Blue)

Effective and Revised Feb 2021

TAPEPRO
DRYWALL TOOLS

Automatic Taper SuperLite

(Sheet 2 of 3)

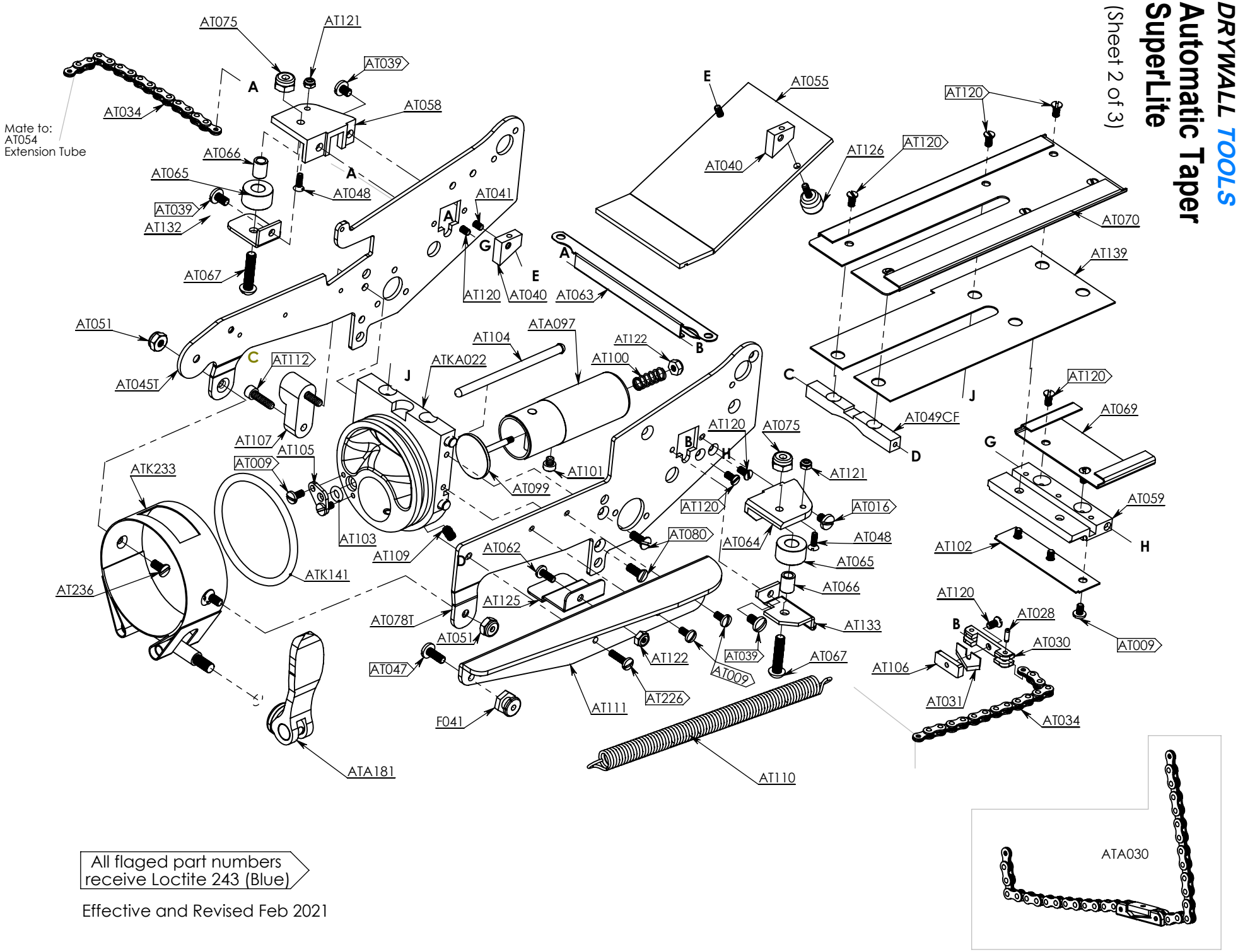

All flaged part numbers receive Loctite 243 (Blue)

Effective and Revised Feb 2021

TAPEPRO DRYWALL TOOLS

Automatic Taper SuperLite

(Sheet 3of 3)

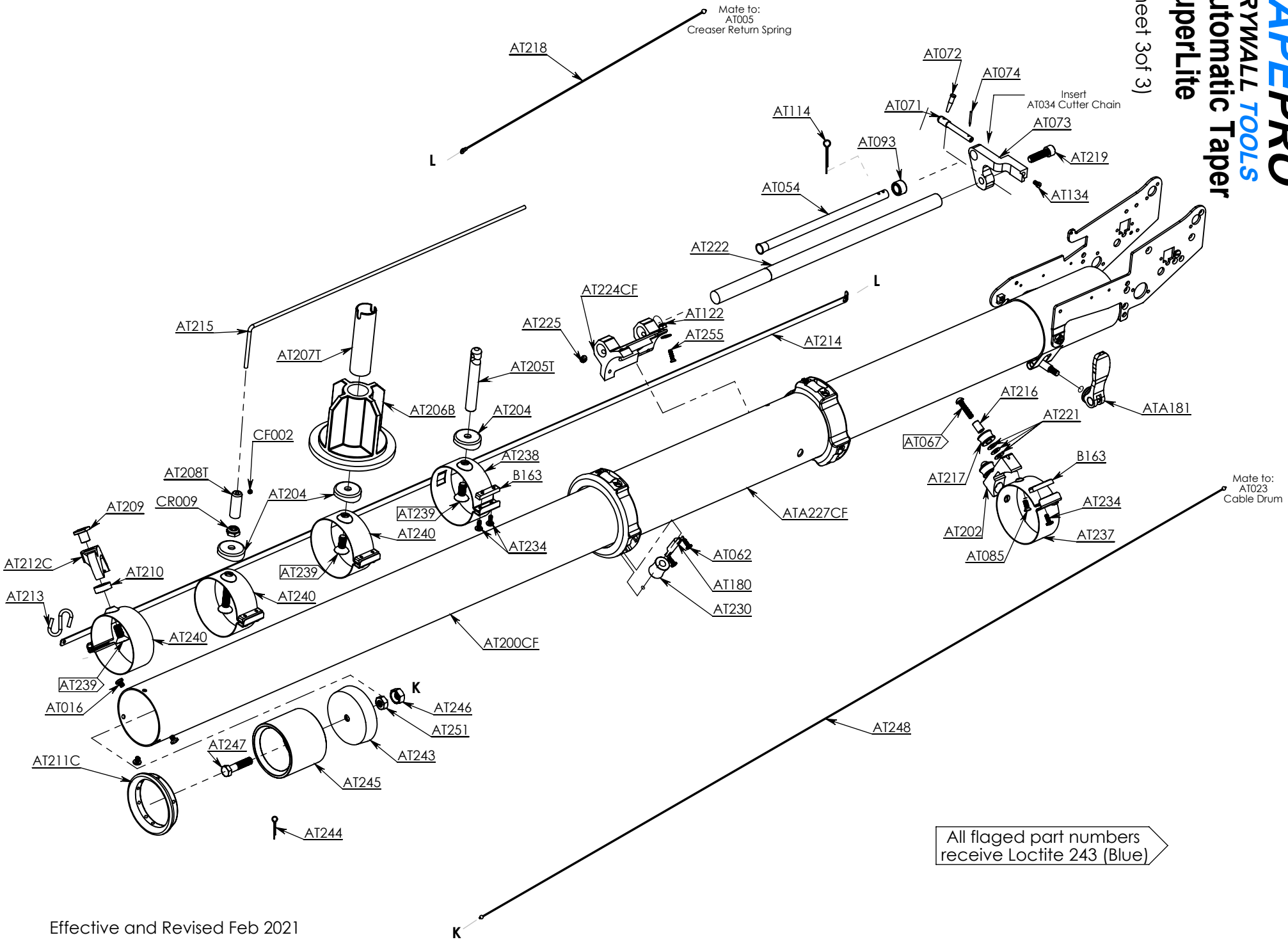

All flaged part numbers receive Loctite 243 (Blue)

Effective and Revised Feb 2021